KYOCERA

FS-1370DN
ECOSYS P2135dn

PARTS LIST

Published in January 2014
2L0PL072
Rev.2

—— CONTENTS ——

FIG. 1 Covers 2
FIG. 2 Frames 4
FIG. 3 Paper Cassette 6
FIG. 4 Paper Feed Section 1 8
FIG. 5 Paper Feed Section 2 10
FIG. 6 Image Formation Section 12
FIG. 7 Developing Section 14
FIG. 8 Fuser Section 16
FIG. 9 Drive Section 18
FIG. 10 Duplex Section 20
FIG. 11 Electrical Components 22
FIG. 12 Maintenance Kits 24

• INDEX 25

<Notation of products>
For the purpose of this parts list, products are identified as following.
FS-1370DN : (A)
ECOSYS P2135dn : (B)

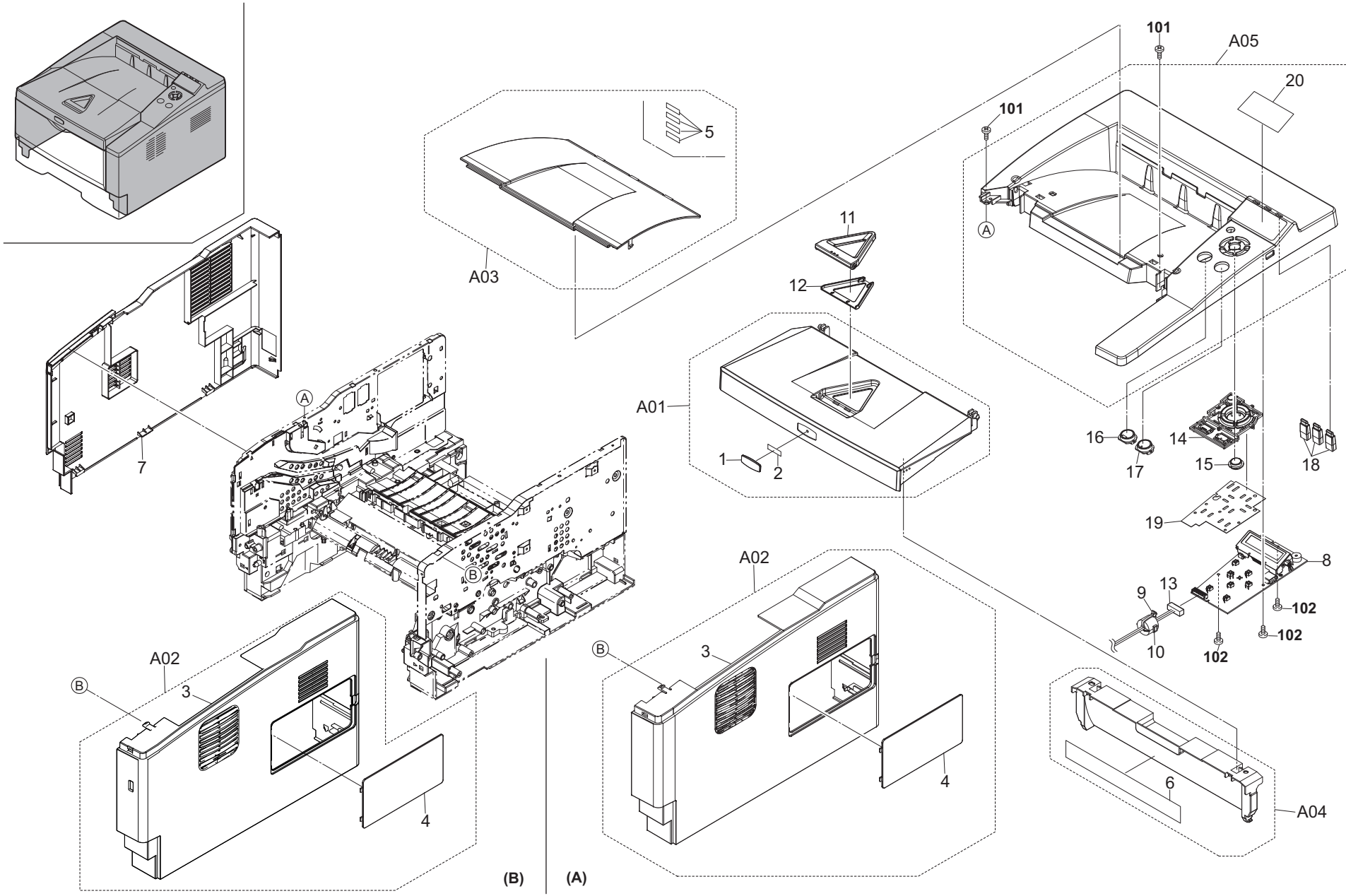
101
A05
20
101
5
A03
11
12
A01
1
2
7
16
17
14
15
18
19
8
13
9
10
102
102
102
A02
3
4
A02
3
4
6
A04
(B)
(A)

FIG. 1 Covers

2L0/2PJ-2

	Ref. No.	Part.No.	Alternative.	Description	Notes	Quantity 120	230	240
⊙	A01	302HS94020	2HS94020	LID TOP ASSY		1	1	1
	1	•302F904120	2F904120	EMBLEM KYOCERA		1	1	1
	2	•302F904130	2F904130	TAPE EMBLEM		1	1	1
⊙	A02	302L000010	2L000010	COVER RIGHT ASSY	(A)	1	1	1
⊙	A02	302PJ00020	2PJ00020	COVER RIGHT ASSY	(B)	1	1	1
	3	•302L004010	2L004010	COVER RIGHT	(A)	1	1	1
	3	•302PJ04010	2PJ04010	COVER RIGHT	(B)	1	1	1
	4	•302LZ04030	2LZ04030	COVER DIMM		1	1	1
⊙	A03	302H494010	2H494010	COVER TOP B(N) KIT SP		1	1	1
	5	•302HS04170	2HS04170	SHEET TOP COVER		4	4	4
⊙	A04	302HS94121	2HS94121	COVER FRONT ASSY (2HS) SP		1	1	1
	6	•302HS34080	2HS34080	LABEL JAM TK OPERATION		1	1	1
⊙	7	302LZ04011	2LZ04011	COVER LEFT		1	1	1
⊙	8	302L094050	2L094050	PARTS PWB LCD SP	(A)	1	1	1
⊙	8	302PJ94070	2PJ94070	PARTS PWB ASSY PANEL SP	(B)	1	1	1
	9	7YZM420002++H01	YZ045260	ACCESS.BAND		1	1	1
	10	7YBEJ0J0D001H01	YB045400	FERRITE CORE		1	1	1
⊙	11	302HS04070	2HS04070	COVER RACK		1	1	1
⊙	12	302HS04160	2HS04160	COVER RACK B		1	1	1
	13	302H446020	2H446020	CONN.CORD ASSY LCD-RELAY S03394	(A)	1	1	1
	13	302PJ46010	2PJ46010	CONN.CORD ASSY S03863	(B)	1	1	1
	14	302H405010	2H405010	BUTTON A		1	1	1
	15	302H405020	2H405020	BUTTON B		1	1	1
	16	302H405030	2H405030	BUTTON C		1	1	1
	17	302H405040	2H405040	BUTTON D	(A)	1	1	1
	17	302PJ05010	2PJ05010	BUTTON D	(B)	1	1	1
	18	302H405110	2H405110	LENS LED		3	3	3
	19	302H405080	2H405080	SHEET BUTTON		1	1	1
⊙	A05	302L094030	2L094030	PARTS COVER TOP ASSY SP	(A)	1	1	1
⊙	A05	302PJ94010	2PJ94010	PARTS COVER TOP ASSY SP	(B)	1	1	1
⊙	20	•302H404061	2H404061	SHEET LCD		1	1	1

	Ref. No.	Part.No.	Alternative.	Description	Notes	Quantity 120	230	240
	101	7BB200410H	BB105700	+BIND T.T P SCREW 4X10				
	102	7BB200308H	BB105660	+BIND T.T P SCREW 3X8				

- Parts with "⊙" indicate regular maintenance parts.
- Parts with Ref.No. indicate maintenance parts and the ones without it indicate out of the above.
- Parts with "•" are component parts or sub-assemblies of the assembly appearing immediately above them.
- Parts with "• •" are component parts or sub-assembly with "•" appearing immediately above them.

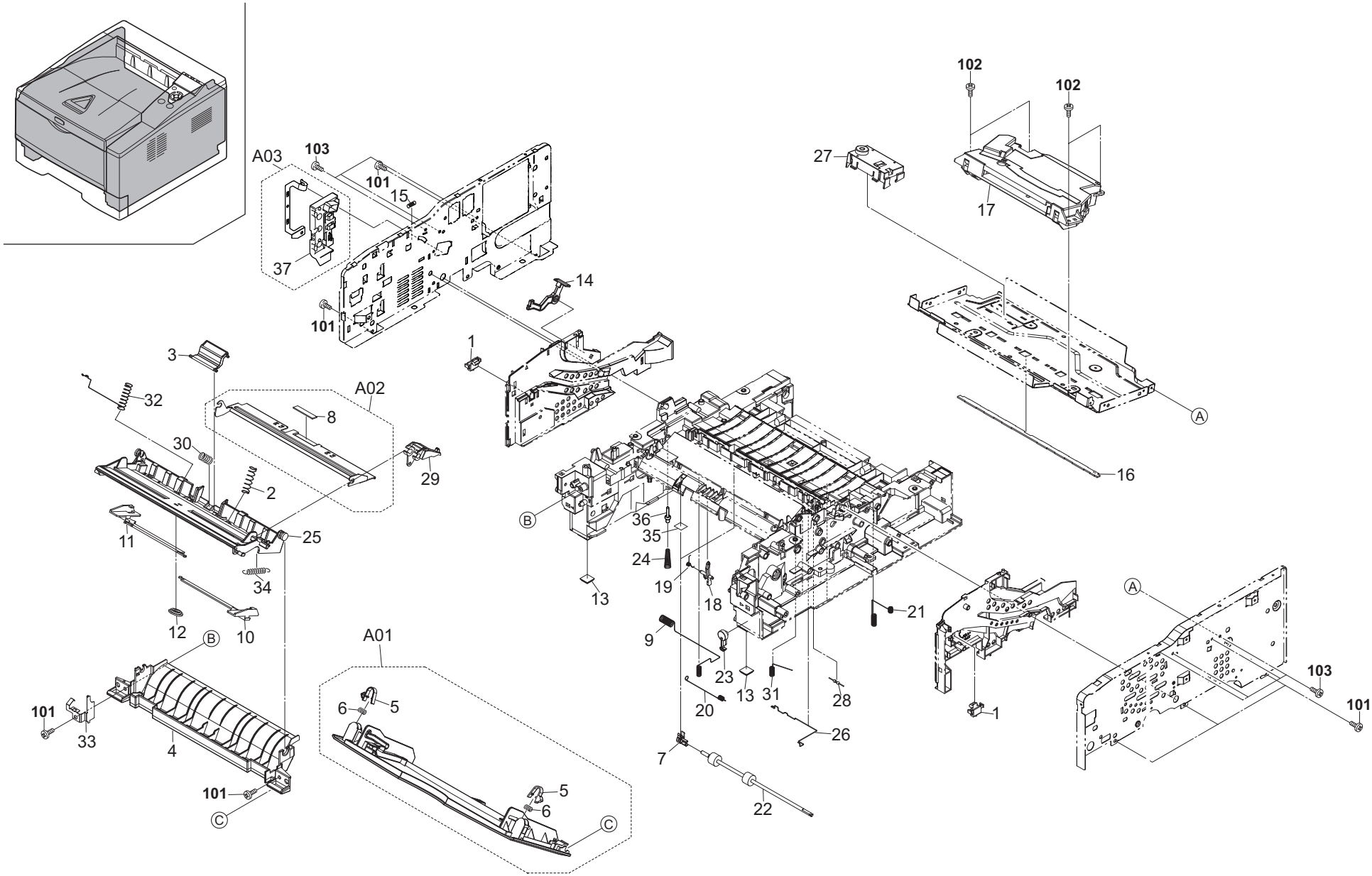
A03
103
101
15
37
101
14
1
3
32
A02
8
30
29
2
25
11
34
12
10
B
101
33
4
101
C
A01
6
5
5
6
C
B
36
35
24
19
18
13
9
23
13
31
20
28
26
7
22
21
102
102
27
17
A
16
A
103
101
1

FIG. 2 Frames

2L0/2PJ-1

	Ref. No.	Part.No.	Alternative.	Description	Notes	Quantity 120	230	240
	1	302F902420	2F902420	LOCK COVER TOP R		2	2	2
	2	302F908270	2F908270	SP BOTTOM MPF L		1	1	1
⊙	3	302HS94040	2HS94040	SEPARATOR MPF ASSY		1	1	1
	4	302LZ08020	2LZ08020	GUIDE TURN MPF		1	1	1
⊙	A01	302LZ94090	2LZ94090	PARTS TRAY MPF ASSY SP		1	1	1
	5	•302F908200	2F908200	LOCK COVER		2	2	2
	6	•302HS08320	2HS08320	SPRING COVER MPF		2	2	2
	7	302HS24130	2HS24130	BUSH 4 DU ROLL		2	2	2
⊙	A02	302HS94050	2HS94050	PLATE BOTTOM MPF ASSY		1	1	1
	8	•302F908310	2F908310	PAD FRICTION MPF		1	1	1
	9	302HS02160	2HS02160	SPRING MC		1	1	1
	10	302HS08241	2HS08241	GUIDE MPF R		1	1	1
	11	302HS08251	2HS08251	GUIDE MPF L		1	1	1
	12	5MVG137DN032	2A806720	GEAR MPF /A-49 MPF A4		1	1	1
⊙	13	302J002010	2J002010	FOOT		2	2	2
⊙	14	302HS02090	2HS02090	LEVER STOPPER DLP		1	1	1
	15	302HS02100	2HS02100	SPRING STOPPER DLP		1	1	1
⊙	16	302LZ94010	2LZ94010	PARTS PWB ERASER SP		1	1	1
⊙	17	302LZ93030	2LZ93030	LK-170		1	1	1
	18	302LZ24030	2LZ24030	ACTUATOR REGIST		1	1	1
	19	302HS24070	2HS24070	SPRING ACTUATOR REG		1	1	1
	20	302H402060	2H402060	SPRING EARTH DU FEED		1	1	1
	21	302HS02330	2HS02330	SPRING EARTH DU PLATE		1	1	1
⊙	22	302HS24160	2HS24160	ROLLER DU		2	2	2
⊙	23	302HS02650	2HS02650	HOOK PF		1	1	1
	24	302HS02470	2HS02470	SPRING PIN BIAS		1	1	1
	25	302HS08050	2HS08050	BASE MPF		1	1	1
	26	302H402040	2H402040	SPRING REG GND		1	1	1
⊙	27	302H994360	2H994360	PARTS FULL SENSOR ASSY SP		1	1	1
	28	7RHA2H10701+H01	RH043740	M.GLAZE R. 100MJ 1/2W		1	1	1
	29	302HS08100	2HS08100	BRACKET BOTTOM		1	1	1
	30	302HS08170	2HS08170	SPRING SEPARATOR		1	1	1
	31	302HS24300	2HS24300	SPRING CONTACT TC		1	1	1
	32	302HS08210	2HS08210	SPRING EARTH MPF		1	1	1
	33	302HS08230	2HS08230	PLATE EARTH BOTTOM		1	1	1
	34	302HS08270	2HS08270	SPRING BRACKET		1	1	1
	35	302HS02700	2HS02700	SHEET BUSH DU		1	1	1
	36	302HS02461	2HS02461	PIN CONTACT BIAS		1	1	1
⊙	A03	302HS94281	2HS94281	HOLDER MCH ASSY		1	1	1
	37	•302HS02132	2HS02132	HOLDER MC		1	1	1

	Ref. No.	Part.No.	Alternative.	Description	Notes	Quantity 120	230	240
	101	7BB200410H	BB105700	+BIND T.T P SCREW 4X10				
	102	7BB600308H	BB055190	+BIND SCREW M3X8 CRFREE SR				
	103	7BB100306H1	BB105820	+BIND T.T S SCREW 3X6				

- Parts with "⊙" indicate regular maintenance parts.
- Parts with Ref.No. indicate maintenance parts and the ones without it indicate out of the above.
- Parts with "•" are component parts or sub-assemblies of the assembly appearing immediately above them.
- Parts with "• •" are component parts or sub-assembly with "•" appearing immediately above them.

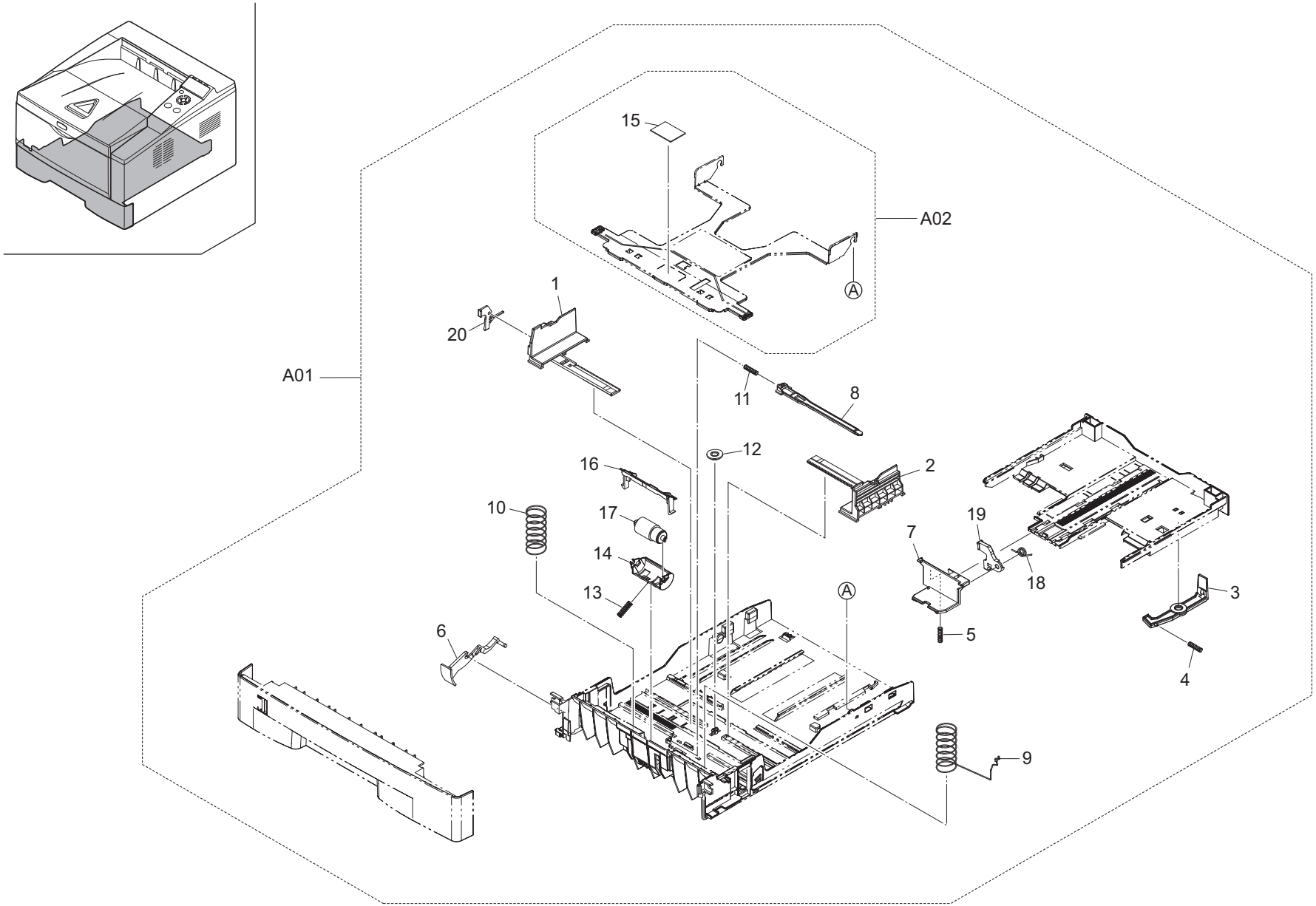
15
A02
Ⓐ
1
20
A01
11
8
12
16
2
10
17
19
7
14
18
3
13
Ⓐ
6
5
4
9

FIG. 3 Paper Cassette

	Ref. No.	Part.No.	Alternative.	Description	Notes	Quantity 120	230	240
⊙	A01	302LZ93071	2LZ93071	CT-170		1	1	1
	1	•2FM06010	5MVX765SH004	GUIDE SIDE L /B-11 CASSETTE A2		1	1	1
	2	•2FM06020	5MVX765SH005	GUIDE SIDE R /B-11 CASSETTE A2		1	1	1
	3	•302F909031	2F909031	LEVER BASE CAS REAR		1	1	1
	4	•302F909040	2F909040	SPRING BASE CAS REAR		1	1	1
	5	•302HN09190	2HN09190	SPRING FIX		1	1	1
	6	•302HS09070	2HS09070	PAPER INDICATOR		1	1	1
	7	•302HS09081	2HS09081	CURSOR END		1	1	1
	8	•302HS09100	2HS09100	LOCK BOTTOM		1	1	1
	9	•302HS09120	2HS09120	SPRING BOTTOM L		1	1	1
	10	•302HS09130	2HS09130	SPRING BOTTOM R		1	1	1
	11	•302HS09140	2HS09140	SPRING LOCK BOTTOM		1	1	1
	12	•302HS09160	2HS09160	GEAR CASSETTE		1	1	1
	13	•302HS09180	2HS09180	SPRING RETARD		1	1	1
	14	•302HS09260	2HS09260	HOLDER RETARD		1	1	1
⊙	A02	•302HS94000	2HS94000	PLATE BOTTOM ASSY		1	1	1
	15	••302F909210	2F909210	PAD BOTTOM		1	1	1
	16	•302LZ09030	2LZ09030	GUIDE RETARD		1	1	1
⊙	17	•302BR06521	2BR06521	RETARD ROLL ASSY /43487V0005 A4		1	1	1
	18	•5MMW171LD006	2A807530	SPRING STOPPER /A49 CASSETTE A4		1	1	1
	19	•5MVX541DG002	2A807191	LEVER REAR /A-49 CASSETTE A3		1	1	1
	20	•5MVX541DG003	2A807161	LEVER SIDE /A-49 CASSETTE A3		1	1	1

	Ref. No.	Part.No.	Alternative.	Description	Notes	Quantity 120	230	240

- Parts with "⊙" indicate regular maintenance parts.
- Parts with Ref.No. indicate maintenance parts and the ones without it indicate out of the above.
- Parts with "•" are component parts or sub-assemblies of the assembly appearing immediately above them.
- Parts with "•• •" are component parts or sub-assembly with "••" appearing immediately above them.

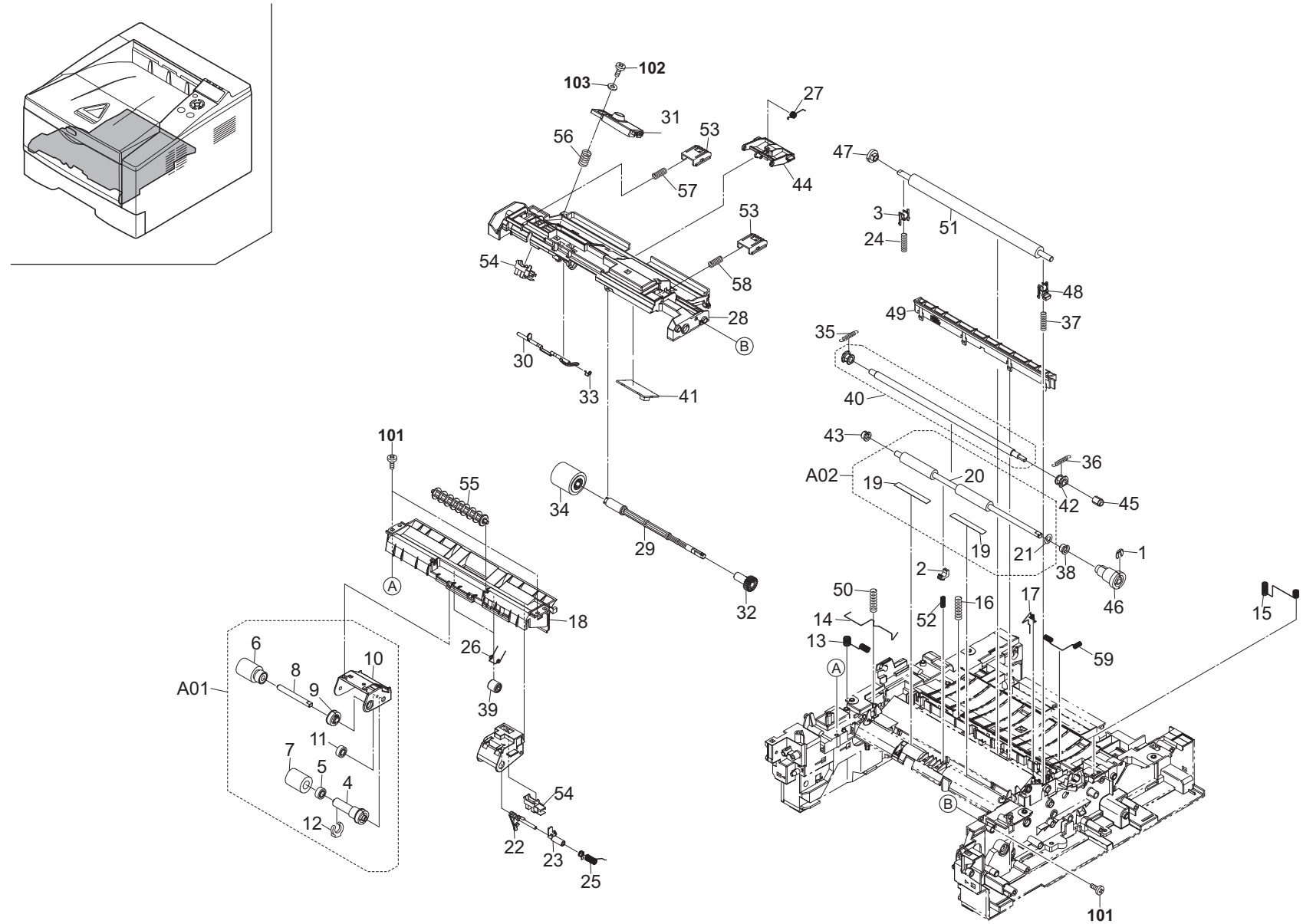
102
103
31
27
56
53
57
44
47
3
24
51
53
54
58
48
49
37
28
B
35
30
33
41
40
101
43
36
A02
19
20
55
34
42
45
29
19
21
1
2
38
A
32
50
16
17
46
15
14
52
18
13
59
6
26
10
8
A01
9
39
11
7
5
4
54
12
22
23
25
101

FIG. 4 Paper Feed Section 1

	Ref. No.	Part.No.	Alternative.	Description	Notes	Quantity 120	230	240
⊙	1	5MVX111DN003	2A806250	RING STOPPER /A-49 FEED A4		1	1	1
	2	302LZ24220	2LZ24220	BUSH REGIST C		1	1	1
⊙	3	302A816031	2A816031	BUSH TC R /A-49 FEED A4		1	1	1
⊙	A01	302HS94032	2HS94032	HOLDER FEED ASSY		1	1	1
	4	•302F906170	2F906170	JOINT PICKUP A		1	1	1
	5	•302F906180	2F906180	JOINT PICKUP B		1	1	1
	6	•302F906230	2F906230	PULLEY FEED ASSY		1	1	1
	7	•302F906240	2F906240	PULLEY PICKUP ASSY		1	1	1
	8	•302F906272	2F906272	SHAFT FEED L		1	1	1
	9	•302F906280	2F906280	GEAR FEED Z30H		1	1	1
	10	•302HS06020	2HS06020	HOLDER FEED		1	1	1
⊙	11	•302HS06090	2HS06090	GEAR Z22S FEED		1	1	1
⊙	12	•5MVX111DN003	2A806250	RING STOPPER /A-49 FEED A4		1	1	1
	13	302LZ02100	2LZ02100	SPRING EARTH REG UP		1	1	1
	14	302HS02260	2HS02260	SPRING EARTH REG LOW		1	1	1
	15	302HS02340	2HS02340	SPRING EARTH RIGHT		1	1	1
	16	302HS02410	2HS02410	SPRING EARTH DU MID		1	1	1
	17	302HS02440	2HS02440	SPRING EARTH DLP PLATE		1	1	1
	18	302HS06010	2HS06010	FRAME FEED		1	1	1
⊙	A02	302HS94081	2HS94081	REGIST LOW KIT		1	1	1
	19	•302HS24181	2HS24181	SHEET REGIST		2	2	2
	20	•302HS24410	2HS24410	ROLLER REGIST LOW		1	1	1
	21	•7BC460529080H01	BC059590	CUT WASHER 5.2X9.0X0.8T(BLACK)		1	1	1
⊙	22	302LZ06011	2LZ06011	ACTUATOR EMPTY A		1	1	1
⊙	23	302HS06071	2HS06071	ACTUATOR EMPTY B		1	1	1
	24	302LZ24090	2LZ24090	SPRING TC L		1	1	1
	25	302HS06120	2HS06120	SPRING ACTUATOR		1	1	1
	26	302HS06130	2HS06130	SPRING PULLEY		2	2	2
	27	302HS08351	2HS08351	SPRING COVER REG		1	1	1
	28	302HS08011	2HS08011	FRAME MPF		1	1	1
	29	302HS08080	2HS08080	SHAFT FEED MPF		1	1	1
⊙	30	302HS08110	2HS08110	ACTUATOR MPF		1	1	1
⊙	31	302HS94150	2HS94150	EMPTY SENSOR KIT SP		1	1	1
⊙	32	302HS08160	2HS08160	GEAR Z20S MPF		1	1	1
	33	302HS08190	2HS08190	SPRING ACTUATOR		1	1	1
⊙	34	302HS08260	2HS08260	ROLLER M/P ASSY		1	1	1
⊙	35	302LZ24120	2LZ24120	SPRING REGIST LB		1	1	1
⊙	36	302LZ24110	2LZ24110	SPRING REGIST RB		1	1	1
	37	302HS24400	2HS24400	SPRING TC R		1	1	1
	38	302HS24460	2HS24460	BUSH REGIST R		1	1	1
	39	5MVM273DB005	2A820100	PULLEY EXIT /A-49 FUSER A3		2	2	2
⊙	40	302LZ94050	2LZ94050	PARTS ROLLER REGIST UP SP		1	1	1
	41	302HS01130	2HS01130	P.W.B RFID WITH SOFTWARE		1	1	1
	42	302HS24120	2HS24120	BUSH REGIST		1	1	1
	43	302HS24140	2HS24140	BUSH 6 EW		1	1	1
	44	302HS08340	2HS08340	COVER REG SW		1	1	1
⊙	45	302HS24190	2HS24190	GEAR Z14R REG UP		1	1	1
⊙	46	302HS24200	2HS24200	GEAR Z21L-Z23L REG LOW		1	1	1
⊙	47	302LZ24010	2LZ24010	GEAR Z17L TC		1	1	1
⊙	48	302HS24250	2HS24250	BUSH TC R		1	1	1
⊙	49	302H494080	2H494080	HOLDER DC BRUSH ASSY		1	1	1
	50	302HS24280	2HS24280	SPRING RELEASE TC L		1	1	1
⊙	51	302LZ94060	2LZ94060	PARTS ROLLER TRANSFER E SP			1	1
⊙	51	302LZ94070	2LZ94070	PARTS ROLLER TRANSFER A SP		1		
	52	302HS24360	2HS24360	SPRING REGIST C		1	1	1
⊙	53	5MVX431DN005	2FV02100	LEVER LOCK DLP		2	2	2
	54	7NXSG2481+++H01	NX052600	SENSOR OPT.		2	2	2
	55	302HS06050	2HS06050	PULLEY FEED		1	1	1
	56	5MMW261LD036	2A814570	SPRING TE SENSOR /A-49 DLP A4		1	1	1
	57	5MMW261LD067	2FV02270	SPRING LEVER LOCK L		1	1	1
	58	5MMW261LD068	2FV02280	SPRING LEVER LOCK R		1	1	1
	59	302HS24310	2HS24310	SPRING EARTH BRUSH		1	1	1
	101	7BB200410H	BB105700	+BIND T.T P SCREW 4X10				
	102	7BB202308H	BB105690	+TP-FLAT T.T P SCREW 3X8				
	103	7BC00030A080H01	BC046150	WASHER M3X10X0.8T				

- Parts with "⊙" indicate regular maintenance parts.
- Parts with Ref.No. indicate maintenance parts and the ones without it indicate out of the above.
- Parts with "•" are component parts or sub-assemblies of the assembly appearing immediately above them.
- Parts with "• •" are component parts or sub-assembly with "•" appearing immediately above them.

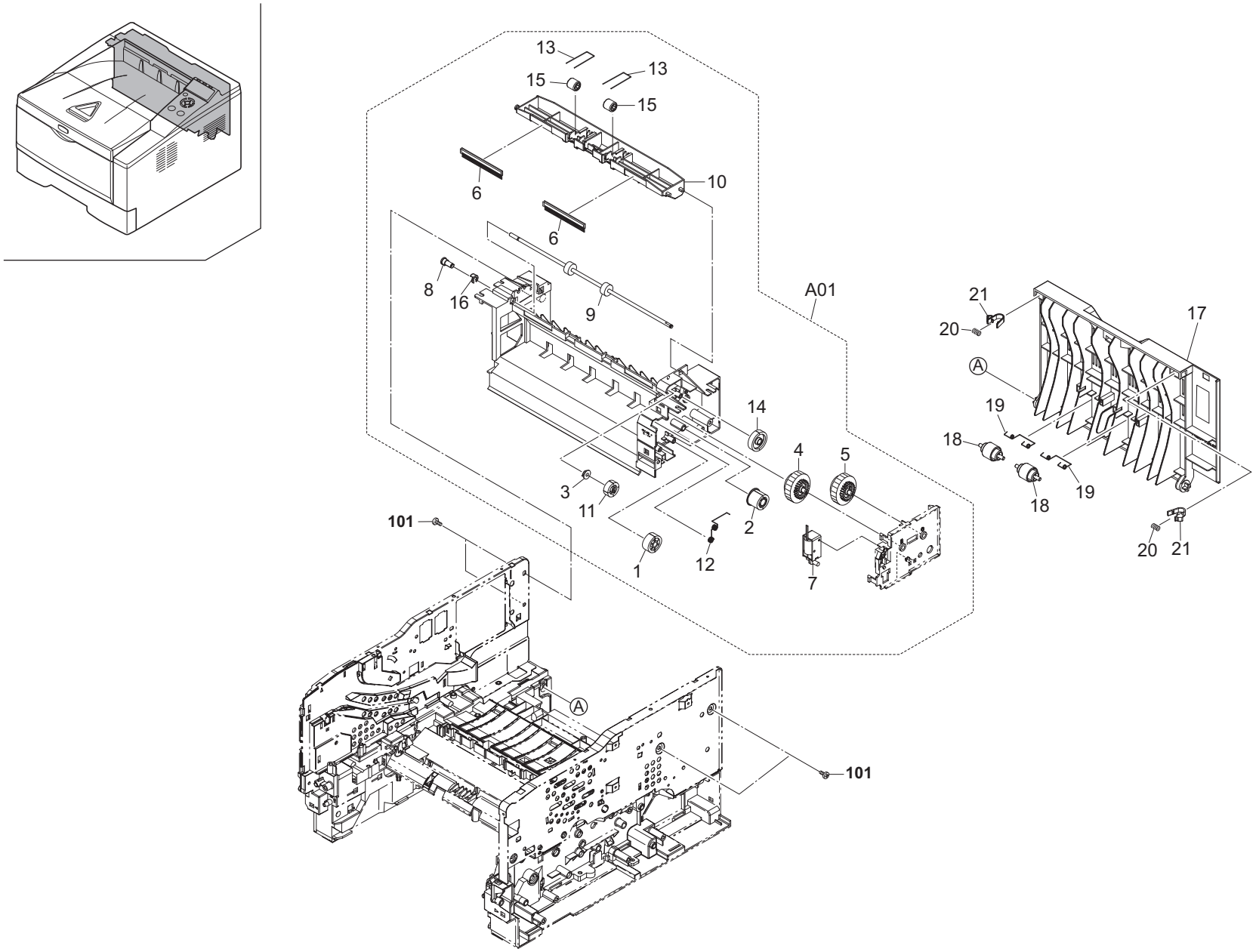
13
13
15
15
10
6
6
8
16
9
A01
21
20
17
A
19
18
19
18
14
4
5
3
11
2
1
12
7
20
21
101
A
101

FIG. 5 Paper Feed Section 2

2L0/2PJ-2

	Ref. No.	Part.No.	Alternative.	Description	Notes	Quantity 120	230	240
⊙	A01	302L094110	2L094110	PARTS FD ASSY (2L0) SP	(A)	1	1	1
⊙	A01	302LZ94100	2LZ94100	PARTS FD ASSY (2LZ) SP	(B)	1	1	1
⊙	1	•2BL06380	2BL06380	GEAR Z25 JOINT		1	1	1
⊙	2	•2FM02350	5MVG133DN022	GEAR Z22 /B-11 FRAME A4		1	1	1
	3	•302F929140	2F929140	BUSH DU		1	1	1
⊙	4	•302FM94020	2FM94020	GEAR CLUTCH ASSY A SP		1	1	1
⊙	5	•302FM94030	2FM94030	GEAR CLUTCH ASSY B SP		1	1	1
⊙	6	•302H428020	2H428020	DISCHARGER FD		2	2	2
⊙	7	•302H494070	2H494070	SOLENOID ASSY SP		1	1	1
	8	•302HN29050	2HN29050	BUSH DU		1	1	1
⊙	9	•302HS28830	2HS28830	ROLLER FD UP B		1	1	1
	10	•302HS28041	2HS28041	COVER FD		1	1	1
⊙	11	•302HS28060	2HS28060	GEAR Z21S		1	1	1
	12	•302HS28110	2HS28110	SPRING EARTH		1	1	1
	13	•302HS28141	2HS28141	SPRING PULLEY		2	2	2
⊙	14	•302HS28170	2HS28170	GEAR FD Z29S		1	1	1
	15	•5MVM273DB005	2A820100	PULLEY EXIT /A-49 FUSER A3		2	2	2
	16	•5MVX111DN007	2BT11070	STOPPER 3 /2BT1107 A4		1	1	1
⊙	17	302HS94160	2HS94160	COVER REAR ASSY SP		1	1	1
	18	302HS28070	2HS28070	PULLEY EXIT		2	2	2
	19	302HS28120	2HS28120	SPRING EXIT		2	2	2
	20	302HS08320	2HS08320	SPRING COVER MPF		2	2	2
	21	302F908200	2F908200	LOCK COVER		2	2	2

	Ref. No.	Part.No.	Alternative.	Description	Notes	Quantity 120	230	240
	101	7BB200410H	BB105700	+BIND T.T P SCREW 4X10				

- Parts with "⊙" indicate regular maintenance parts.
- Parts with Ref.No. indicate maintenance parts and the ones without it indicate out of the above.
- Parts with "•" are component parts or sub-assemblies of the assembly appearing immediately above them.
- Parts with "• •" are component parts or sub-assembly with "•" appearing immediately above them.

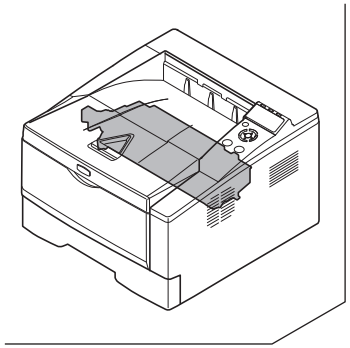

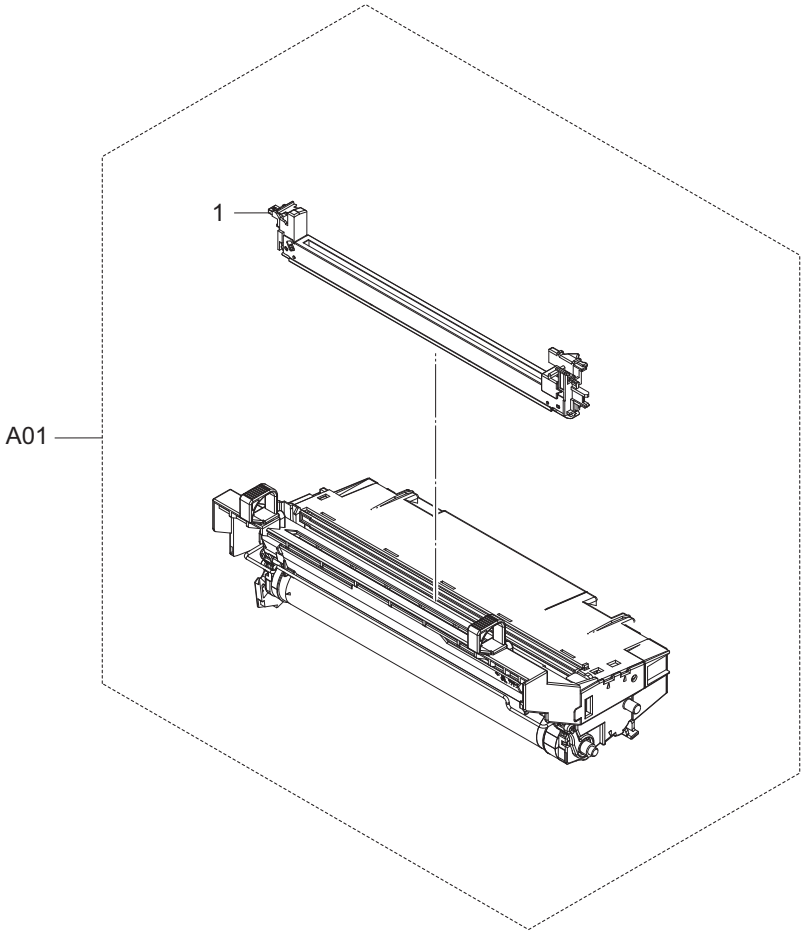
1
A01

FIG. 6 Image Formation Section

2L0/2PJ-1

	Ref. No.	Part.No.	Alternative.	Description	Notes	Quantity 120	230	240
⊙	A01	302LZ93061	2LZ93061	DK-170		1	1	1
⊙	1	•302HS93070	2HS93070	MC-130		1	1	1

	Ref. No.	Part.No.	Alternative.	Description	Notes	Quantity 120	230	240

- Parts with "⊙" indicate regular maintenance parts.
- Parts with Ref.No. indicate maintenance parts and the ones without it indicate out of the above.
- Parts with "•" are component parts or sub-assemblies of the assembly appearing immediately above them.
- Parts with "• •" are component parts or sub-assembly with "•" appearing immediately above them.

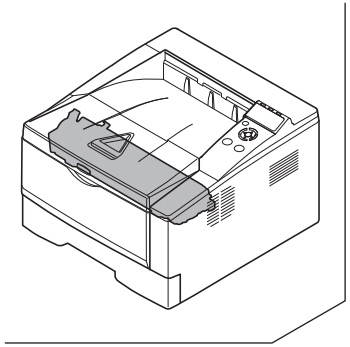

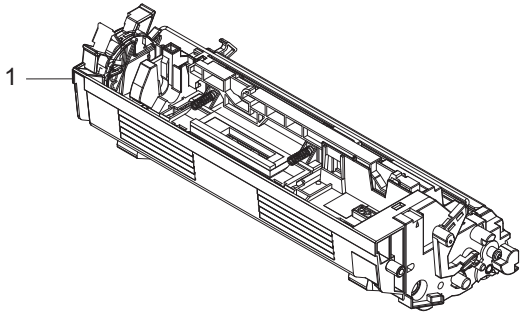
1

FIG. 7 Developing Section

2L0/2PJ

	Ref. No.	Part.No.	Alternative.	Description	Notes	Quantity 120	230	240
⊙	1	302LZ93010	2LZ93010	DV-170(E)			1	
⊙	1	302LZ93020	2LZ93020	DV-172(U)		1		
⊙	1	302LZ93080	2LZ93080	DV-174(AO)				1

	Ref. No.	Part.No.	Alternative.	Description	Notes	Quantity 120	230	240

- Parts with "⊙" indicate regular maintenance parts.
- Parts with Ref.No. indicate maintenance parts and the ones without it indicate out of the above.
- Parts with "•" are component parts or sub-assemblies of the assembly appearing immediately above them.
- Parts with "• •" are component parts or sub-assembly with "•" appearing immediately above them.

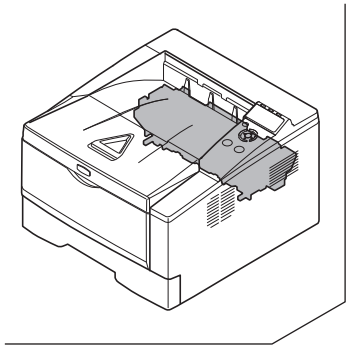

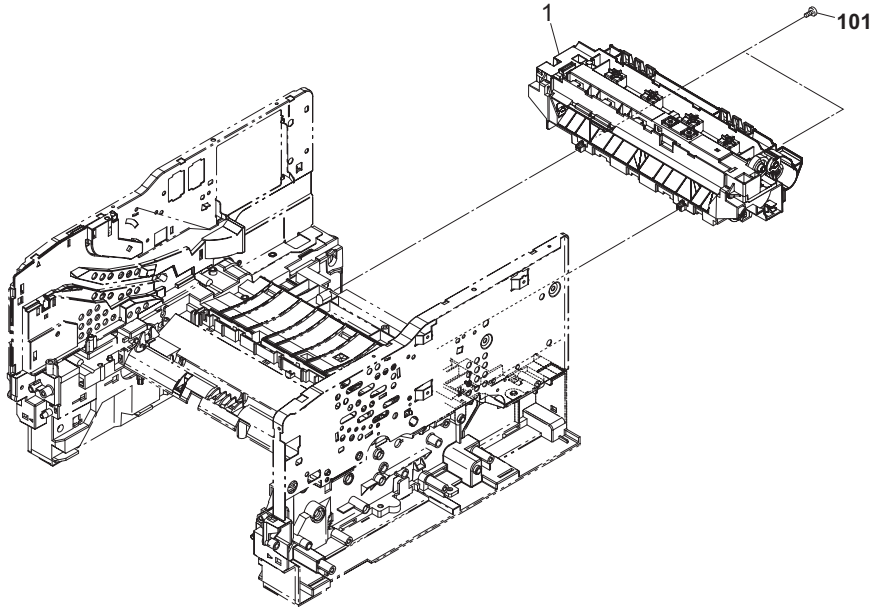
1
101

FIG. 8 Fuser Section

	Ref. No.	Part.No.	Alternative.	Description	Notes	Quantity 120	230	240
⊙	1	302LZ93040	2LZ93040	FK-170(E)	(A)		1	1
⊙	1	302PH93010	2PH93010	FK-171(E)	(B)		1	1
⊙	1	302LZ93050	2LZ93050	FK-170(U)	(A)	1		
⊙	1	302PH93020	2PH93020	FK-171(U)	(B)	1		

	Ref. No.	Part.No.	Alternative.	Description	Notes	Quantity 120	230	240
	101	7BB200410H	BB105700	+BIND T.T P SCREW 4X10				

- Parts with "⊙" indicate regular maintenance parts.
- Parts with Ref.No. indicate maintenance parts and the ones without it indicate out of the above.

- Parts with "•" are component parts or sub-assemblies of the assembly appearing immediately above them.
- Parts with "• •" are component parts or sub-assembly with "•" appearing immediately above them.

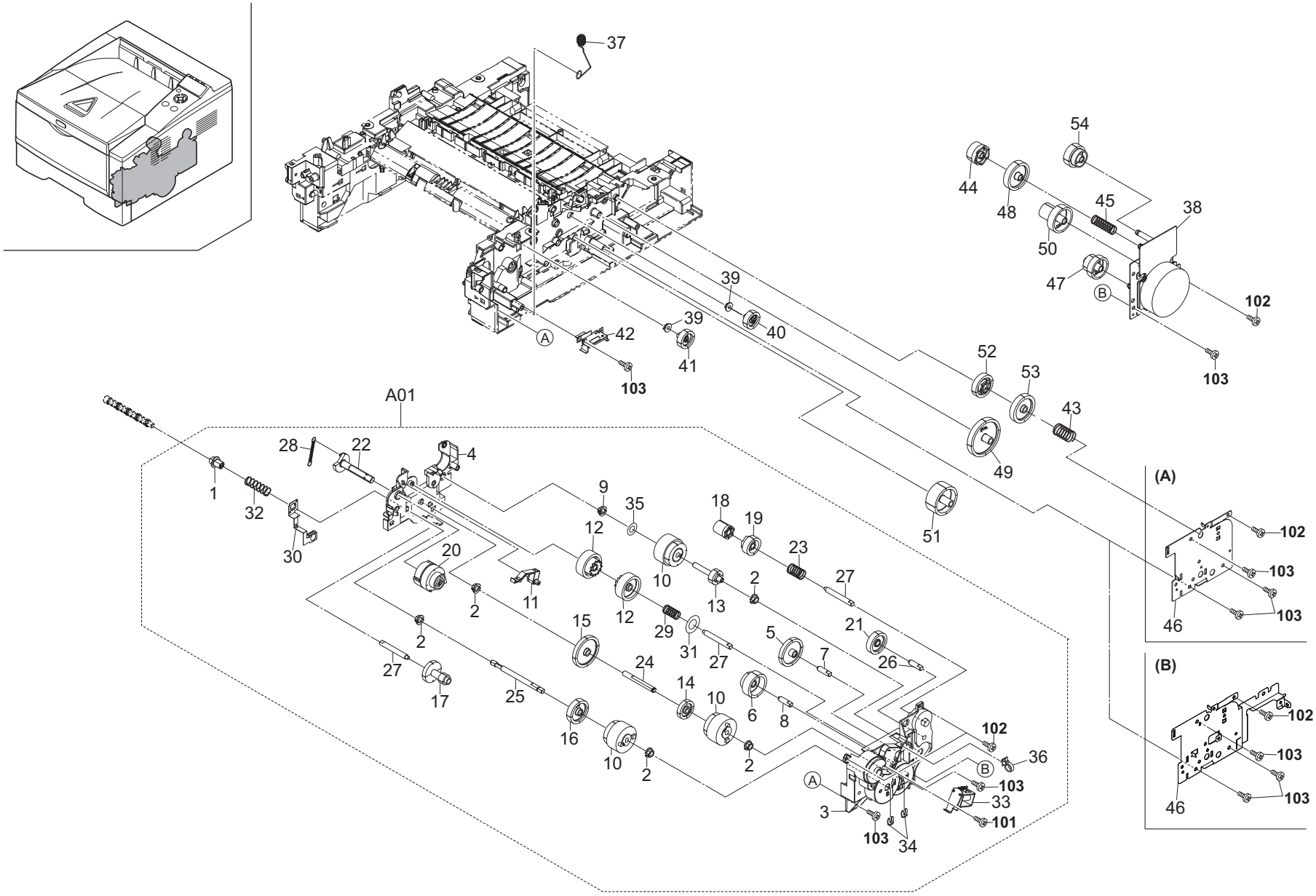
37
54
44
48
45
38
50
47
B
102
103
39
39
40
A
42
41
103
52
53
43
49
51
A01
28
22
4
1
32
30
9
35
18
19
12
20
10
23
27
2
11
12
13
2
15
29
31
27
5
21
7
26
2
27
17
25
24
14
10
6
8
16
10
2
2
102
36
B
103
33
101
A
3
103
34
(A)
102
103
103
46
(B)
102
103
103
46

FIG. 9 Drive Section

2L0/2PJ-2

	Ref. No.	Part.No.	Alternative.	Description	Notes	Quantity 120	230	240
⊙	A01	302H493040	2H493040	DR-150		1	1	1
	1	*302F931350	2F931350	JOINT SHAFT CASSETTE		1	1	1
	2	*302F931490	2F931490	BUSH FEED DRIVE		5	5	5
	3	*302H431010	2H431010	HOLDER DRIVE		1	1	1
	4	*302H431020	2H431020	COVER HOLDER DRIVE		1	1	1
⊙	5	*302H431030	2H431030	GEAR Z42R		1	1	1
⊙	6	*302H431040	2H431040	GEAR Z34L-Z24L		1	1	1
	7	*302H431050	2H431050	PIN HOLDER A		1	1	1
	8	*302H431060	2H431060	PIN HOLDER B		1	1	1
	9	*302H431070	2H431070	BUSH DRIVE 6		1	1	1
⊙	10	*302HN44111	2HN44111	CLUTCH FEED		3	3	3
	11	*302HS31050	2HS31050	LEVER LIFT BOTTOM		1	1	1
⊙	12	*302HS31090	2HS31090	GEAR Z37L FREE		2	2	2
⊙	13	*302HS31100	2HS31100	GEAR Z20L CLUTCH		1	1	1
⊙	14	*302HS31120	2HS31120	GEAR Z27L CLUTCH		1	1	1
⊙	15	*302HS31130	2HS31130	GEAR Z45R CLUTCH		1	1	1
⊙	16	*302HS31140	2HS31140	GEAR Z35R IDLE		1	1	1
⊙	17	*302HS31150	2HS31150	GEAR Z31L-Z14S		1	1	1
⊙	18	*302HS31190	2HS31190	GEAR Z17R FREE		1	1	1
⊙	19	*302HS31200	2HS31200	GEAR Z26L FREE		1	1	1
⊙	20	*302HS31230	2HS31230	GEAR Z38S MPF		1	1	1
⊙	21	*302HS31260	2HS31260	GEAR Z32R		1	1	1
	22	*302HS31281	2HS31281	LIFT BOTTOM		1	1	1
	23	*302HS31320	2HS31320	SPRING FREE MAG		1	1	1
	24	*302HS31330	2HS31330	PIN CLUTCH		1	1	1
	25	*302HS31340	2HS31340	SHAFT CASSETTE		1	1	1
	26	*302HS31360	2HS31360	PIN HOLDER A		1	1	1
	27	*302HS31370	2HS31370	PIN HOLDER B		3	3	3
	28	*302HS31380	2HS31380	SPRING LIFT BOTTOM		1	1	1
	29	*302HS31410	2HS31410	SPRING FREE Z37L		1	1	1
	30	*302HS31420	2HS31420	EARTH PLATE DRIVE		1	1	1
	31	*302HS31430	2HS31430	POLYSLIDER 9.5		1	1	1
	32	*302HS31440	2HS31440	SPRING FEED		1	1	1
⊙	33	*302HS44020	2HS44020	SOLENOID MPF		1	1	1
⊙	34	*5MVX111DN003	2A806250	RING STOPPER /A-49 FEED A4		2	2	2
	35	*7BC06062C020H01	BC045240	POLY SLIDER WASHER M6.2X12X0.2T		1	1	1
	36	*M2107250	M2107250	BAND,RSG-100(KITAGAWA)		1	1	1
	37	302HS02370	2HS02370	SPRING EARTH CASSETTE		1	1	1
⊙	38	302LZ94021	2LZ94021	PARTS MOTOR ASSY SP		1	1	1
	39	302F929140	2F929140	BUSH DU		2	2	2
⊙	40	302HS24220	2HS24220	GEAR Z25R DU FEED		1	1	1
⊙	41	302HS24230	2HS24230	GEAR Z26L DU MID		1	1	1
	42	302HS02381	2HS02381	PLATE PF CONNECTOR		1	1	1
	43	302HS31310	2HS31310	SPRING FREE FUSER		1	1	1
⊙	44	302HS31390	2HS31390	GEAR Z27R FREE 2		1	1	1
	45	302LZ31040	2LZ31040	SPRING FREE DRUM		1	1	1
	46	302HS31041	2HS31041	PLATE GEAR DRIVE	(A)	1	1	1
	46	302PK31010	2PK31010	PLATE GEAR DRIVE	(B)	1	1	1
⊙	47	302HS31250	2HS31250	GEAR Z54R-Z24R		1	1	1
⊙	48	302HS31070	2HS31070	GEAR Z42R FREE 2		1	1	1
⊙	49	302HS31110	2HS31110	GEAR Z58L		1	1	1
⊙	50	302H431080	2H431080	GEAR Z64R-Z21L		1	1	1
⊙	51	302HS31180	2HS31180	GEAR Z44R		1	1	1
⊙	52	302HS31210	2HS31210	GEAR Z35S FREE		1	1	1
⊙	53	302HS31220	2HS31220	GEAR Z42R FREE		1	1	1
⊙	54	302HS31240	2HS31240	GEAR Z32L DRUM		1	1	1
	101	7BB200308H	BB105660	+BIND T.T P SCREW 3X8				
	102	7BB100306H	BB046010	+BIND T.T S SCREW 3X6				
	103	7BB200410H	BB105700	+BIND T.T P SCREW 4X10				

- Parts with "⊙" indicate regular maintenance parts.
- Parts with Ref.No. indicate maintenance parts and the ones without it indicate out of the above.
- Parts with "•" are component parts or sub-assemblies of the assembly appearing immediately above them.
- Parts with "• •" are component parts or sub-assembly with "•" appearing immediately above them.

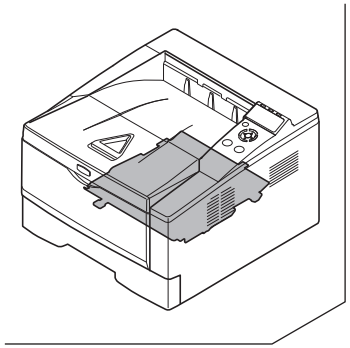

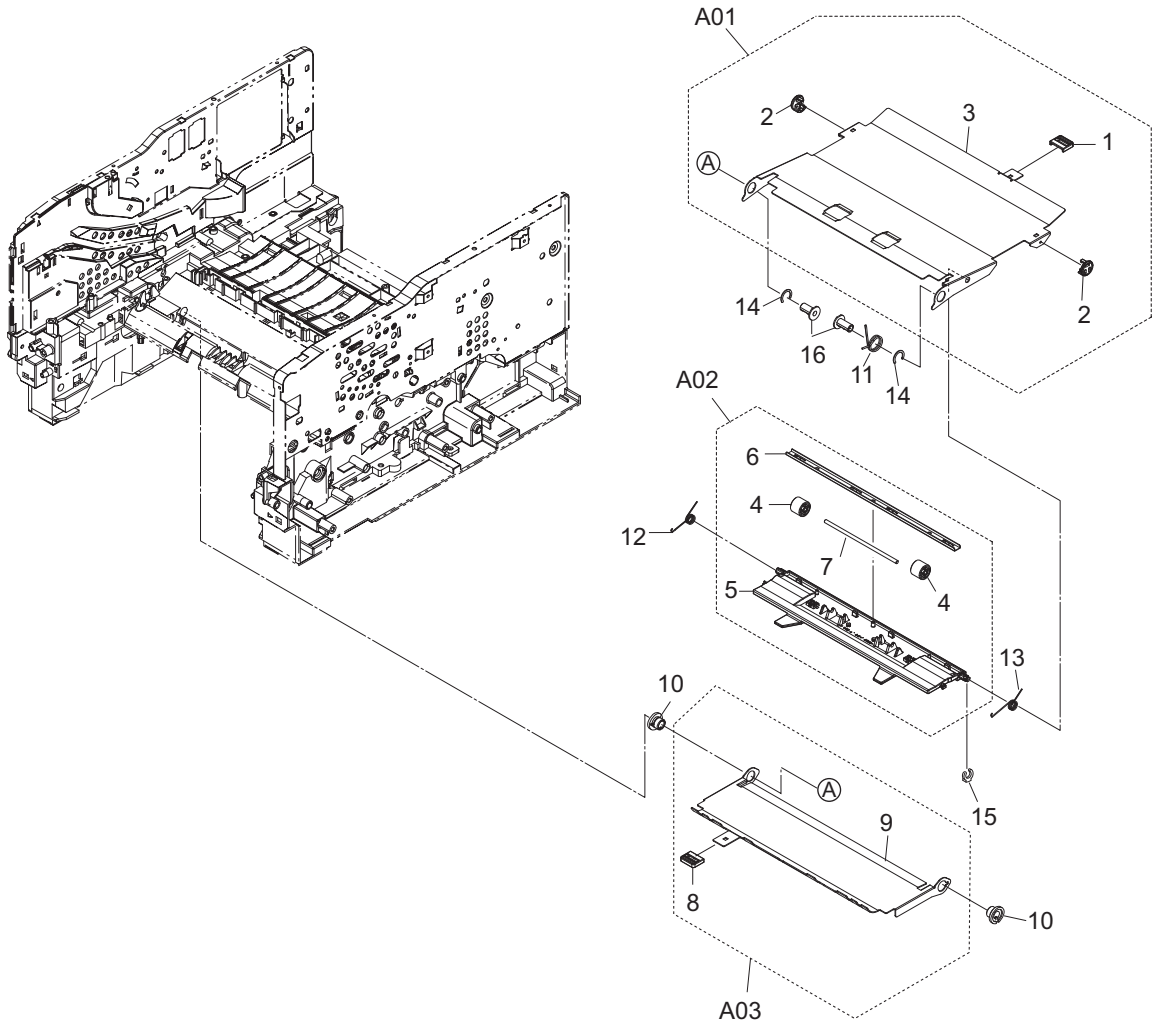
A01
2
3
1
A
2
14
16
11
14
A02
6
4
12
7
4
5
13
10
A
15
9
8
10
A03

FIG. 10 Duplex Section

	Ref. No.	Part.No.	Alternative.	Description	Notes	Quantity 120	230	240
⊙	A01	302HS94320	2HS94320	PARTS PLATE COVER DU B ASSY SP		1	1	1
	1	•2FM02690	5MVX221DG002	LEVER DU /B-11 DU A3		1	1	1
	2	•2FM21050	5MVX173DN001	COLLER DU /B-11 DU A3		2	2	2
	3	•302HS29020	2HS29020	PLATE COVER DU B		1	1	1
⊙	A02	302FM94061	2FM94061	PARTS HOLDER DU ASSY SP		1	1	1
⊙	4	•2FM02210	5MVM274DN002	PULLEY MID /B-11 FRAME A4		2	2	2
	5	•302FM21011	2FM21011	HOLDER DU		1	1	1
	6	•2FM21020	5MML821SD009	STAY DU /B-11 DU A3		1	1	1
	7	•302FM02421	2FM02421	SHAFT PULLEY /B-11 FRAME A4		1	1	1
⊙	A03	302HS94331	2HS94331	PARTS PLATE COVER DU ASSY SP		1	1	1
	8	•2FM02690	5MVX221DG002	LEVER DU /B-11 DU A3		1	1	1
	9	•302HS29011	2HS29011	PLATE COVER DU		1	1	1
	10	2FM02140	5MVM786XB001	BUSH DU /B-11 FRAME A3		2	2	2
	11	2FM02500	5MMW176SD002	SPRING DU R /B-11 FRAME A4		1	1	1
	12	2FM02510	5MMW166SD002	SPRING HOLDER L /B-11 FRAME A4		1	1	1
	13	2FM02520	5MMW166SD003	SPRING HOLDER R /B-11 FRAME A4		1	1	1
	14	5MBCK9560XSC	D4103700	C STOP RING /X9.5 X 0.6T S-CR		2	2	2
⊙	15	5MVX111DN003	2A806250	RING STOPPER /A-49 FEED A4		1	1	1
	16	2FM21030	5MVM276DN017	STOPPER BUSH /B-11 DU A4		2	2	2

	Ref. No.	Part.No.	Alternative.	Description	Notes	Quantity 120	230	240

- Parts with "⊙" indicate regular maintenance parts.
- Parts with Ref.No. indicate maintenance parts and the ones without it indicate out of the above.
- Parts with "•" are component parts or sub-assemblies of the assembly appearing immediately above them.
- Parts with "• •" are component parts or sub-assembly with "•" appearing immediately above them.

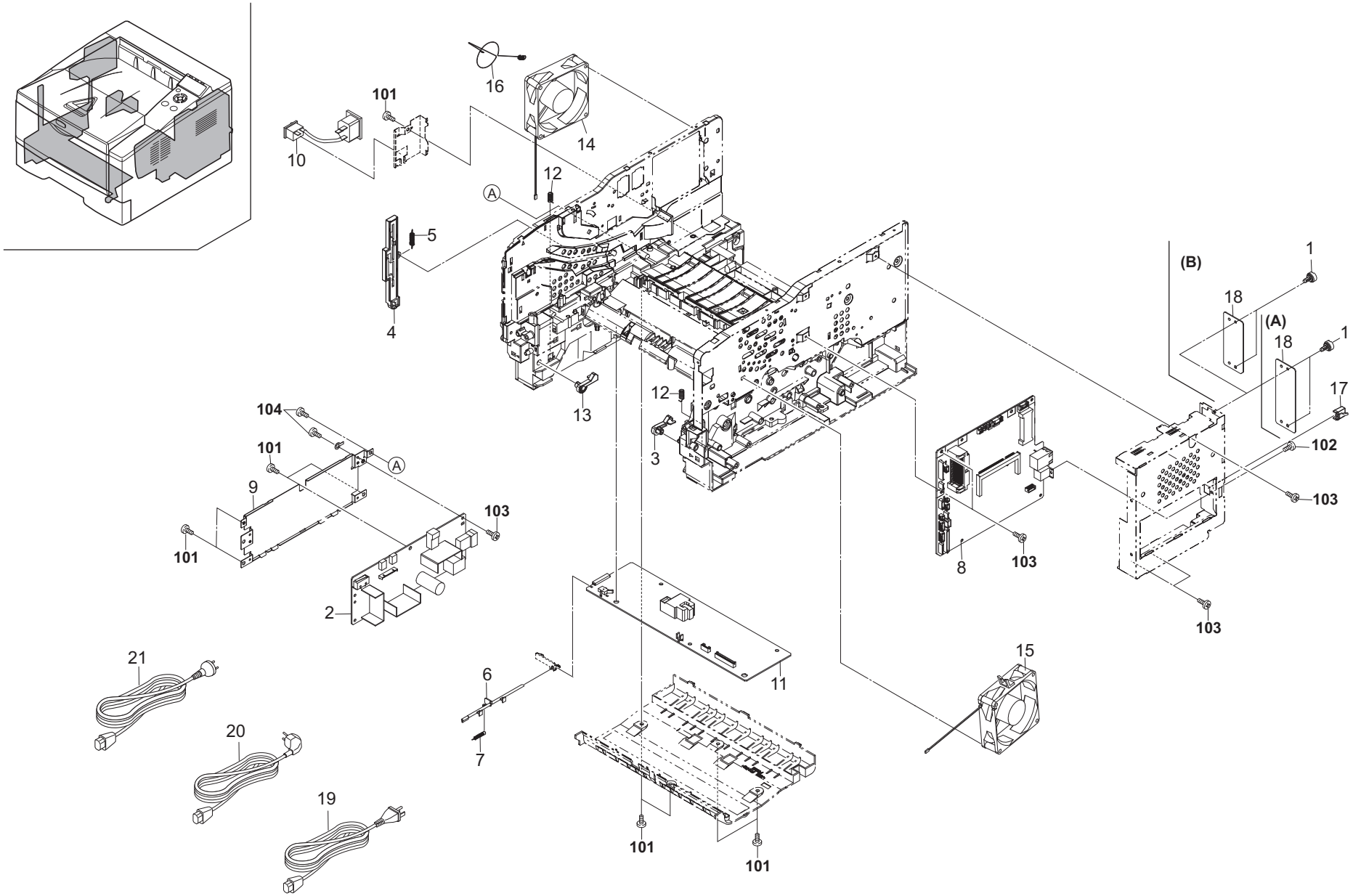
16
101
14
10
12
A
5
4
13
12
3
104
101
A
9
103
101
2
21
20
19
6
7
11
101
101
15
8
103
(B)
1
18
(A)
18
1
17
102
103
103

FIG. 11 Electrical Components

2L0/2PJ-2

	Ref. No.	Part.No.	Alternative.	Description	Notes	Quantity 120	230	240
	1	302F939082	2F939082	SCREW BOX		2	2	2
⊙	2	302HS45013	2HS45013	SWITCHING REGULATOR 230V	(A)		1	1
⊙	2	302PG94020	2PG94020	PARTS SWITCHING REGULATOR 230V SP	(B)		1	1
⊙	2	302HS45021	2HS45021	SWITCHING REGULATOR 120V		1		
⊙	3	302HS02070	2HS02070	LEVER LOCK CASSETTE		1	1	1
⊙	4	302HS02110	2HS02110	LEVER INTERLOCK SW		1	1	1
	5	302HS02120	2HS02120	SPRING INTERLOCK SW		1	1	1
⊙	6	302HS02180	2HS02180	PIN CASSETTE		1	1	1
	7	302HS02190	2HS02190	SPRING PIN CASSETTE		1	1	1
⊙	8	302L094010	2L094010	PARTS PWB CONTROL SP	(A)	1	1	1
⊙	8	302PJ94040	2PJ94040	PARTS PWB ASSY MAIN SP	(B)	1		1
⊙	8	302PJ94050	2PJ94050	PARTS PWB ASSY MAIN EU SP	(B)		1	
⊙	9	302HS02210	2HS02210	PLATE POWER SUPPLY		1	1	1
	10	302HS46120	2HS46120	CONN.CORD ASSY PWS-INLET S03238		1	1	1
⊙	11	302LZ94041	2LZ94041	PARTS HIGH VOLTAGE UNIT SP		1	1	1
	12	302HS02360	2HS02360	SPRING LOCK CASSETTE		2	2	2
⊙	13	302HS02390	2HS02390	LEVER LOCK CASSETTE L		1	1	1
⊙	14	302LZ94030	2LZ94030	PARTS MOTOR FAN 80 SP		1	1	1
⊙	15	302L094070	2L094070	PARTS MOTOR FAN 80 ASSY SP		1	1	1
	16	302HS02620	2HS02620	SPRING EARTH FAN		1	1	1
	17	302F939090	2F939090	CAP NETWORK		1	1	1
	18	302HS39040	2HS39040	PLATE OPTION	(A)	1	1	1
	18	302K339050	2K339050	PLATE OPTION	(B)	1	1	1
	19	7AAACCUS+10H001	AA068380	AC CORD ASSY US		1		
	20	302FV94010	2FV94010	PARTS AC CORD EU SP			1	
	21	302FV45040	2FV45040	AC CORD ASSY				1

	Ref. No.	Part.No.	Alternative.	Description	Notes	Quantity 120	230	240
	101	7BB200410H	BB105700	+BIND T.T P SCREW 4X10				
	102	5MBSPB3006NW++R	B1B03060	BIND HEAD SCREW(+) / M3 X 6 CRFREE				
	103	7BB100306H1	BB105820	+BIND T.T S SCREW 3X6				
	104	5MBTPB4006TW++R	B1A54060	BIND T.T SCREW(+) / M4 X 6 CRFREE S-T				

- Parts with "⊙" indicate regular maintenance parts.
- Parts with Ref.No. indicate maintenance parts and the ones without it indicate out of the above.

- Parts with "•" are component parts or sub-assemblies of the assembly appearing immediately above them.
- Parts with "• •" are component parts or sub-assembly with "•" appearing immediately above them.

FIG. 12 Maintenance Kits

	Ref. No.	Part.No.	Alternative.	Description	Notes	Quantity 120	230	240
		1702LZ7US0	072LZ7US	MK-172/MAINTENANCE KIT	OPTION	1		
				DV-172(U)		1		
				DK-170		1		
		1702LZ8AS0	072LZ8AS	MK-174/MAINTENANCE KIT	OPTION			1
				DV-174(AO)				1
				DK-170				1
		1702LZ8NL0	072LZ8NL	MK-170/MAINTENANCE KIT	OPTION		1	
				DV-170(E)			1	
				DK-170			1	

	Ref. No.	Part.No.	Alternative.	Description	Notes	Quantity 120	230	240

- Parts with "⊙" indicate regular maintenance parts.
- Parts with Ref.No. indicate maintenance parts and the ones without it indicate out of the above.
- Parts with "•" are component parts or sub-assemblies of the assembly appearing immediately above them.
- Parts with "• •" are component parts or sub-assembly with "•" appearing immediately above them.

	Part.No.	Alternative.	Description	Fig.No.
	1702LZ7US0	072LZ7US	MK-172/MAINTENANCE KIT	12
	1702LZ8AS0	072LZ8AS	MK-174/MAINTENANCE KIT	12
	1702LZ8NL0	072LZ8NL	MK-170/MAINTENANCE KIT	12
⊙	2BL06380	2BL06380	GEAR Z25 JOINT	5
	2FM02140	5MVM786XB001	BUSH DU /B-11 FRAME A3	10
⊙	2FM02210	5MVM274DN002	PULLEY MID /B-11 FRAME A4	10
⊙	2FM02350	5MVG133DN022	GEAR Z22 /B-11 FRAME A4	5
	2FM02500	5MMW176SD002	SPRING DU R /B-11 FRAME A4	10
	2FM02510	5MMW166SD002	SPRING HOLDER L /B-11 FRAME A4	10
	2FM02520	5MMW166SD003	SPRING HOLDER R /B-11 FRAME A4	10
	2FM02690	5MVX221DG002	LEVER DU /B-11 DU A3	10
	2FM06010	5MVX765SH004	GUIDE SIDE L /B-11 CASSETTE A2	3
	2FM06020	5MVX765SH005	GUIDE SIDE R /B-11 CASSETTE A2	3
	2FM21020	5MML821SD009	STAY DU /B-11 DU A3	10
	2FM21030	5MVM276DN017	STOPPER BUSH /B-11 DU A4	10
	2FM21050	5MVX173DN001	COLLER DU /B-11 DU A3	10
⊙	302A816031	2A816031	BUSH TC R /A-49 FEED A4	4
⊙	302BR06521	2BR06521	RETARD ROLL ASSY /43487V0005 A4	3
	302F902420	2F902420	LOCK COVER TOP R	2
	302F904120	2F904120	EMBLEM KYOCERA	1
	302F904130	2F904130	TAPE EMBLEM	1
	302F906170	2F906170	JOINT PICKUP A	4
	302F906180	2F906180	JOINT PICKUP B	4
	302F906230	2F906230	PULLEY FEED ASSY	4
	302F906240	2F906240	PULLEY PICKUP ASSY	4
	302F906272	2F906272	SHAFT FEED L	4
	302F906280	2F906280	GEAR FEED Z30H	4
	302F908200	2F908200	LOCK COVER	2,5
	302F908270	2F908270	SP BOTTOM MPF L	2
	302F908310	2F908310	PAD FRICTION MPF	2
	302F909031	2F909031	LEVER BASE CAS REAR	3
	302F909040	2F909040	SPRING BASE CAS REAR	3
	302F909210	2F909210	PAD BOTTOM	3
	302F929140	2F929140	BUSH DU	5,9
	302F931350	2F931350	JOINT SHAFT CASSETTE	9
	302F931490	2F931490	BUSH FEED DRIVE	9
	302F939082	2F939082	SCREW BOX	11
	302F939090	2F939090	CAP NETWORK	11
	302FM02421	2FM02421	SHAFT PULLEY /B-11 FRAME A4	10
	302FM21011	2FM21011	HOLDER DU	10
⊙	302FM94020	2FM94020	GEAR CLUTCH ASSY A SP	5
⊙	302FM94030	2FM94030	GEAR CLUTCH ASSY B SP	5
⊙	302FM94061	2FM94061	PARTS HOLDER DU ASSY SP	10
	302FV45040	2FV45040	AC CORD ASSY	11
	302FV94010	2FV94010	PARTS AC CORD EU SP	11
	302H402040	2H402040	SPRING REG GND	2
	302H402060	2H402060	SPRING EARTH DU FEED	2
⊙	302H404061	2H404061	SHEET LCD	1
	302H405010	2H405010	BUTTON A	1
	302H405020	2H405020	BUTTON B	1

	Part.No.	Alternative.	Description	Fig.No.
	302H405030	2H405030	BUTTON C	1
	302H405040	2H405040	BUTTON D	1
	302H405080	2H405080	SHEET BUTTON	1
	302H405110	2H405110	LENS LED	1
⊙	302H428020	2H428020	DISCHARGER FD	5
	302H431010	2H431010	HOLDER DRIVE	9
	302H431020	2H431020	COVER HOLDER DRIVE	9
⊙	302H431030	2H431030	GEAR Z42R	9
⊙	302H431040	2H431040	GEAR Z34L-Z24L	9
	302H431050	2H431050	PIN HOLDER A	9
	302H431060	2H431060	PIN HOLDER B	9
	302H431070	2H431070	BUSH DRIVE 6	9
⊙	302H431080	2H431080	GEAR Z64R-Z21L	9
	302H446020	2H446020	CONN.CORD ASSY LCD-RELAY S03394	1
⊙	302H493040	2H493040	DR-150	9
⊙	302H494010	2H494010	COVER TOP B(N) KIT SP	1
⊙	302H494070	2H494070	SOLENOID ASSY SP	5
⊙	302H494080	2H494080	HOLDER DC BRUSH ASSY	4
⊙	302H994360	2H994360	PARTS FULL SENSOR ASSY SP	2
	302HN09190	2HN09190	SPRING FIX	3
	302HN29050	2HN29050	BUSH DU	5
⊙	302HN44111	2HN44111	CLUTCH FEED	9
	302HS01130	2HS01130	P.W.B RFID WITH SOFTWARE	4
⊙	302HS02070	2HS02070	LEVER LOCK CASSETTE	11
⊙	302HS02090	2HS02090	LEVER STOPPER DLP	2
	302HS02100	2HS02100	SPRING STOPPER DLP	2
⊙	302HS02110	2HS02110	LEVER INTERLOCK SW	11
	302HS02120	2HS02120	SPRING INTERLOCK SW	11
	302HS02132	2HS02132	HOLDER MC	2
	302HS02160	2HS02160	SPRING MC	2
⊙	302HS02180	2HS02180	PIN CASSETTE	11
	302HS02190	2HS02190	SPRING PIN CASSETTE	11
⊙	302HS02210	2HS02210	PLATE POWER SUPPLY	11
	302HS02260	2HS02260	SPRING EARTH REG LOW	4
	302HS02330	2HS02330	SPRING EARTH DU PLATE	2
	302HS02340	2HS02340	SPRING EARTH RIGHT	4
	302HS02360	2HS02360	SPRING LOCK CASSETTE	11
	302HS02370	2HS02370	SPRING EARTH CASSETTE	9
	302HS02381	2HS02381	PLATE PF CONNECTOR	9
⊙	302HS02390	2HS02390	LEVER LOCK CASSETTE L	11
	302HS02410	2HS02410	SPRING EARTH DU MID	4
	302HS02440	2HS02440	SPRING EARTH DLP PLATE	4
	302HS02461	2HS02461	PIN CONTACT BIAS	2
	302HS02470	2HS02470	SPRING PIN BIAS	2
	302HS02620	2HS02620	SPRING EARTH FAN	11
⊙	302HS02650	2HS02650	HOOK PF	2
	302HS02700	2HS02700	SHEET BUSH DU	2
⊙	302HS04070	2HS04070	COVER RACK	1
⊙	302HS04160	2HS04160	COVER RACK B	1
	302HS04170	2HS04170	SHEET TOP COVER	1

• Parts with "⊙" indicate regular maintenance parts.

	Part.No.	Alternative.	Description	Fig.No.
	302HS06010	2HS06010	FRAME FEED	4
	302HS06020	2HS06020	HOLDER FEED	4
	302HS06050	2HS06050	PULLEY FEED	4
⊙	302HS06071	2HS06071	ACTUATOR EMPTY B	4
⊙	302HS06090	2HS06090	GEAR Z22S FEED	4
	302HS06120	2HS06120	SPRING ACTUATOR	4
	302HS06130	2HS06130	SPRING PULLEY	4
	302HS08011	2HS08011	FRAME MPF	4
	302HS08050	2HS08050	BASE MPF	2
	302HS08080	2HS08080	SHAFT FEED MPF	4
	302HS08100	2HS08100	BRACKET BOTTOM	2
⊙	302HS08110	2HS08110	ACTUATOR MPF	4
⊙	302HS08160	2HS08160	GEAR Z20S MPF	4
	302HS08170	2HS08170	SPRING SEPARATOR	2
	302HS08190	2HS08190	SPRING ACTUATOR	4
	302HS08210	2HS08210	SPRING EARTH MPF	2
	302HS08230	2HS08230	PLATE EARTH BOTTOM	2
	302HS08241	2HS08241	GUIDE MPF R	2
	302HS08251	2HS08251	GUIDE MPF L	2
⊙	302HS08260	2HS08260	ROLLER M/P ASSY	4
	302HS08270	2HS08270	SPRING BRACKET	2
	302HS08320	2HS08320	SPRING COVER MPF	2,5
	302HS08340	2HS08340	COVER REG SW	4
	302HS08351	2HS08351	SPRING COVER REG	4
	302HS09070	2HS09070	PAPER INDICATOR	3
	302HS09081	2HS09081	CURSOR END	3
	302HS09100	2HS09100	LOCK BOTTOM	3
	302HS09120	2HS09120	SPRING BOTTOM L	3
	302HS09130	2HS09130	SPRING BOTTOM R	3
	302HS09140	2HS09140	SPRING LOCK BOTTOM	3
	302HS09160	2HS09160	GEAR CASSETTE	3
	302HS09180	2HS09180	SPRING RETARD	3
	302HS09260	2HS09260	HOLDER RETARD	3
	302HS24070	2HS24070	SPRING ACTUATOR REG	2
	302HS24120	2HS24120	BUSH REGIST	4
	302HS24130	2HS24130	BUSH 4 DU ROLL	2
	302HS24140	2HS24140	BUSH 6 EW	4
⊙	302HS24160	2HS24160	ROLLER DU	2
	302HS24181	2HS24181	SHEET REGIST	4
⊙	302HS24190	2HS24190	GEAR Z14R REG UP	4
⊙	302HS24200	2HS24200	GEAR Z21L-Z23L REG LOW	4
⊙	302HS24220	2HS24220	GEAR Z25R DU FEED	9
⊙	302HS24230	2HS24230	GEAR Z26L DU MID	9
⊙	302HS24250	2HS24250	BUSH TC R	4
	302HS24280	2HS24280	SPRING RELEASE TC L	4
	302HS24300	2HS24300	SPRING CONTACT TC	2
	302HS24310	2HS24310	SPRING EARTH BRUSH	4
	302HS24360	2HS24360	SPRING REGIST C	4
	302HS24400	2HS24400	SPRING TC R	4
	302HS24410	2HS24410	ROLLER REGIST LOW	4

	Part.No.	Alternative.	Description	Fig.No.
	302HS24460	2HS24460	BUSH REGIST R	4
	302HS28041	2HS28041	COVER FD	5
⊙	302HS28060	2HS28060	GEAR Z21S	5
	302HS28070	2HS28070	PULLEY EXIT	5
	302HS28110	2HS28110	SPRING EARTH	5
	302HS28120	2HS28120	SPRING EXIT	5
	302HS28141	2HS28141	SPRING PULLEY	5
⊙	302HS28170	2HS28170	GEAR FD Z29S	5
⊙	302HS28830	2HS28830	ROLLER FD UP B	5
	302HS29011	2HS29011	PLATE COVER DU	10
	302HS29020	2HS29020	PLATE COVER DU B	10
	302HS31041	2HS31041	PLATE GEAR DRIVE	9
	302HS31050	2HS31050	LEVER LIFT BOTTOM	9
⊙	302HS31070	2HS31070	GEAR Z42R FREE 2	9
⊙	302HS31090	2HS31090	GEAR Z37L FREE	9
⊙	302HS31100	2HS31100	GEAR Z20L CLUTCH	9
⊙	302HS31110	2HS31110	GEAR Z58L	9
⊙	302HS31120	2HS31120	GEAR Z27L CLUTCH	9
⊙	302HS31130	2HS31130	GEAR Z45R CLUTCH	9
⊙	302HS31140	2HS31140	GEAR Z35R IDLE	9
⊙	302HS31150	2HS31150	GEAR Z31L-Z14S	9
⊙	302HS31180	2HS31180	GEAR Z44R	9
⊙	302HS31190	2HS31190	GEAR Z17R FREE	9
⊙	302HS31200	2HS31200	GEAR Z26L FREE	9
⊙	302HS31210	2HS31210	GEAR Z35S FREE	9
⊙	302HS31220	2HS31220	GEAR Z42R FREE	9
⊙	302HS31230	2HS31230	GEAR Z38S MPF	9
⊙	302HS31240	2HS31240	GEAR Z32L DRUM	9
⊙	302HS31250	2HS31250	GEAR Z54R-Z24R	9
⊙	302HS31260	2HS31260	GEAR Z32R	9
	302HS31281	2HS31281	LIFT BOTTOM	9
	302HS31310	2HS31310	SPRING FREE FUSER	9
	302HS31320	2HS31320	SPRING FREE MAG	9
	302HS31330	2HS31330	PIN CLUTCH	9
	302HS31340	2HS31340	SHAFT CASSETTE	9
	302HS31360	2HS31360	PIN HOLDER A	9
	302HS31370	2HS31370	PIN HOLDER B	9
	302HS31380	2HS31380	SPRING LIFT BOTTOM	9
⊙	302HS31390	2HS31390	GEAR Z27R FREE 2	9
	302HS31410	2HS31410	SPRING FREE Z37L	9
	302HS31420	2HS31420	EARTH PLATE DRIVE	9
	302HS31430	2HS31430	POLYSLIDER 9.5	9
	302HS31440	2HS31440	SPRING FEED	9
	302HS34080	2HS34080	LABEL JAM TK OPERATION	1
	302HS39040	2HS39040	PLATE OPTION	11
⊙	302HS44020	2HS44020	SOLENOID MPF	9
⊙	302HS45013	2HS45013	SWITCHING REGULATOR 230V	11
⊙	302HS45021	2HS45021	SWITCHING REGULATOR 120V	11
	302HS46120	2HS46120	CONN.CORD ASSY PWS-INLET S03238	11
⊙	302HS93070	2HS93070	MC-130	6

• Parts with "⊙" indicate regular maintenance parts.

	Part.No.	Alternative.	Description	Fig.No.
⊙	302HS94000	2HS94000	PLATE BOTTOM ASSY	3
⊙	302HS94020	2HS94020	LID TOP ASSY	1
⊙	302HS94032	2HS94032	HOLDER FEED ASSY	4
⊙	302HS94040	2HS94040	SEPARATOR MPF ASSY	2
⊙	302HS94050	2HS94050	PLATE BOTTOM MPF ASSY	2
⊙	302HS94081	2HS94081	REGIST LOW KIT	4
⊙	302HS94121	2HS94121	COVER FRONT ASSY (2HS) SP	1
⊙	302HS94150	2HS94150	EMPTY SENSOR KIT SP	4
⊙	302HS94160	2HS94160	COVER REAR ASSY SP	5
⊙	302HS94281	2HS94281	HOLDER MCH ASSY	2
⊙	302HS94320	2HS94320	PARTS PLATE COVER DU B ASSY SP	10
⊙	302HS94331	2HS94331	PARTS PLATE COVER DU ASSY SP	10
⊙	302J002010	2J002010	FOOT	2
	302K339050	2K339050	PLATE OPTION	11
⊙	302L000010	2L000010	COVER RIGHT ASSY	1
	302L004010	2L004010	COVER RIGHT	1
⊙	302L094010	2L094010	PARTS PWB CONTROL SP	11
⊙	302L094030	2L094030	PARTS COVER TOP ASSY SP	1
⊙	302L094050	2L094050	PARTS PWB LCD SP	1
⊙	302L094070	2L094070	PARTS MOTOR FAN 80 ASSY SP	11
⊙	302L094110	2L094110	PARTS FD ASSY (2L0) SP	5
	302LZ02100	2LZ02100	SPRING EARTH REG UP	4
⊙	302LZ04011	2LZ04011	COVER LEFT	1
	302LZ04030	2LZ04030	COVER DIMM	1
⊙	302LZ06011	2LZ06011	ACTUATOR EMPTY A	4
	302LZ08020	2LZ08020	GUIDE TURN MPF	2
	302LZ09030	2LZ09030	GUIDE RETARD	3
⊙	302LZ24010	2LZ24010	GEAR Z17L TC	4
	302LZ24030	2LZ24030	ACTUATOR REGIST	2
	302LZ24090	2LZ24090	SPRING TC L	4
⊙	302LZ24110	2LZ24110	SPRING REGIST RB	4
⊙	302LZ24120	2LZ24120	SPRING REGIST LB	4
	302LZ24220	2LZ24220	BUSH REGIST C	4
	302LZ31040	2LZ31040	SPRING FREE DRUM	9
⊙	302LZ93010	2LZ93010	DV-170(E)	7
⊙	302LZ93020	2LZ93020	DV-172(U)	7
⊙	302LZ93030	2LZ93030	LK-170	2
⊙	302LZ93040	2LZ93040	FK-170(E)	8
⊙	302LZ93050	2LZ93050	FK-170(U)	8
⊙	302LZ93061	2LZ93061	DK-170	6
⊙	302LZ93071	2LZ93071	CT-170	3
⊙	302LZ93080	2LZ93080	DV-174(AO)	7
⊙	302LZ94010	2LZ94010	PARTS PWB ERASER SP	2
⊙	302LZ94021	2LZ94021	PARTS MOTOR ASSY SP	9
⊙	302LZ94030	2LZ94030	PARTS MOTOR FAN 80 SP	11
⊙	302LZ94041	2LZ94041	PARTS HIGH VOLTAGE UNIT SP	11
⊙	302LZ94050	2LZ94050	PARTS ROLLER REGIST UP SP	4
⊙	302LZ94060	2LZ94060	PARTS ROLLER TRANSFER E SP	4
⊙	302LZ94070	2LZ94070	PARTS ROLLER TRANSFER A SP	4
⊙	302LZ94090	2LZ94090	PARTS TRAY MPF ASSY SP	2

	Part.No.	Alternative.	Description	Fig.No.
⊙	302LZ94100	2LZ94100	PARTS FD ASSY (2LZ) SP	5
⊙	302PG94020	2PG94020	PARTS SWITCHING REGULATOR 230V SP	11
⊙	302PH93010	2PH93010	FK-171(E)	8
⊙	302PH93020	2PH93020	FK-171(U)	8
⊙	302PJ00020	2PJ00020	COVER RIGHT ASSY	1
	302PJ04010	2PJ04010	COVER RIGHT	1
	302PJ05010	2PJ05010	BUTTON D	1
	302PJ46010	2PJ46010	CONN.CORD ASSY S03863	1
⊙	302PJ94010	2PJ94010	PARTS COVER TOP ASSY SP	1
⊙	302PJ94040	2PJ94040	PARTS PWB ASSY MAIN SP	11
⊙	302PJ94050	2PJ94050	PARTS PWB ASSY MAIN EU SP	11
⊙	302PJ94070	2PJ94070	PARTS PWB ASSY PANEL SP	1
	302PK31010	2PK31010	PLATE GEAR DRIVE	9
	5MBCK9560XSC	D4103700	C STOP RING /X9.5 X 0.6T S-CR	10
	5MMW171LD006	2A807530	SPRING STOPPER /A49 CASSETTE A4	3
	5MMW261LD036	2A814570	SPRING TE SENSOR /A-49 DLP A4	4
	5MMW261LD067	2FV02270	SPRING LEVER LOCK L	4
	5MMW261LD068	2FV02280	SPRING LEVER LOCK R	4
	5MVG137DN032	2A806720	GEAR MPF /A-49 MPF A4	2
	5MVM273DB005	2A820100	PULLEY EXIT /A-49 FUSER A3	4,5
⊙	5MVX111DN003	2A806250	RING STOPPER /A-49 FEED A4	4,9,10
	5MVX111DN007	2BT11070	STOPPER 3 /2BT1107 A4	5
⊙	5MVX431DN005	2FV02100	LEVER LOCK DLP	4
	5MVX541DG002	2A807191	LEVER REAR /A-49 CASSETTE A3	3
	5MVX541DG003	2A807161	LEVER SIDE /A-49 CASSETTE A3	3
	7AAACCUS+10H001	AA068380	AC CORD ASSY US	11
	7BC06062C020H01	BC045240	POLY SLIDER WASHER M6.2X12X0.2T	9
	7BC460529080H01	BC059590	CUT WASHER 5.2X9.0X0.8T(BLACK)	4
	7NXSG2481+++H01	NX052600	SENSOR OPT.	4
	7RHA2H10701+H01	RH043740	M.GLAZE R. 100MJ 1/2W	2
	7YBEJ0J0D001H01	YB045400	FERRITE CORE	1
	7YZM420002++H01	YZ045260	ACCESS.BAND	1
	M2107250	M2107250	BAND,RSG-100(KITAGAWA)	9

• Parts with "⊙" indicate regular maintenance parts.

KYOCERA Document Solutions America, Inc.
Headquarters
225 Sand Road,
Fairfield, New Jersey 07004-0008, USA
Phone: +1-973-808-8444
Fax: +1-973-882-6000

Latin America
8240 NW 52nd Terrace Dawson Building, Suite 100
Miami, Florida 33166, USA
Phone: +1-305-421-6640
Fax: +1-305-421-6666

KYOCERA Document Solutions Canada, Ltd.
6120 Kestrel Rd., Mississauga, ON L5T 1S8,
Canada
Phone: +1-905-670-4425
Fax: +1-905-670-8116

KYOCERA Document Solutions Mexico, S.A. de C.V.
Calle Arquimedes No. 130, 4 Piso, Colonia Polanco
Chapultepec, Delegacion Miguel Hidalgo,
Distrito Federal, C.P. 11560, México
Phone: +52-555-383-2741
Fax: +52-555-383-7804

KYOCERA Document Solutions Brazil, Ltda.
Alameda África, 545, Pólo Empresarial Consbrás,
Tamboré, Santana de Parnaíba-SP, CEP 06543-306,
Brazil
Phone: +55-11-4195-8496
Fax: +55-11-4195-6167

KYOCERA Document Solutions Australia Pty. Ltd.
Level 3, 6-10 Talavera Road North Ryde N.S.W, 2113,
Australia
Phone: +61-2-9888-9999
Fax: +61-2-9888-9588

KYOCERA Document Solutions New Zealand Ltd.
Ground Floor, 19 Byron Avenue, Takapuna, Auckland,
New Zealand
Phone: +64-9-415-4517
Fax: +64-9-415-4597

KYOCERA Document Solutions Asia Limited
16/F.,Mita Centre, 552-566, Castle Peak Road
Tsuenwan, NT, Hong Kong
Phone: +852-2610-2181
Fax: +852-2610-2063

KYOCERA Document Solutions (China) Corporation
8F, No. 288 Nanjing Road West, Huangpu District,
Shanghai,200003, China
Phone: +86-21-5301-1777
Fax: +86-21-5302-8300

KYOCERA Document Solutions (Thailand) Corp., Ltd.
335 Ratchadapisek Road, Bangsue, Bangkok 10800,
Thailand
Phone: +66-2-586-0333
Fax: +66-2-586-0278

KYOCERA Document Solutions Singapore Pte. Ltd.
12 Tai Seng Street #04-01A,
Luxasia Building, Singapore 534118
Phone: +65-6741-8733
Fax: +65-6748-3788

KYOCERA Document Solutions Hong Kong Limited
16/F.,Mita Centre, 552-566, Castle Peak Road
Tsuenwan, NT, Hong Kong
Phone: +852-3582-4000
Fax: +852-3185-1399

KYOCERA Document Solutions Taiwan Corporation
6F., No.37, Sec. 3, Minquan E. Rd.,
Zhongshan Dist., Taipei 104, Taiwan R.O.C.
Phone: +886-2-2507-6709
Fax: +886-2-2507-8432

KYOCERA Document Solutions Korea Co., Ltd.
18F, Kangnam bldg, 1321-1,
Seocho-Dong, Seocho-Gu, Seoul, Korea
Phone: +822-6933-4050
Fax: +822-747-0084

KYOCERA Document Solutions India Private Limited
First Floor, ORCHID CENTRE
Sector-53, Golf Course Road, Gurgaon 122 002,
India
Phone: +91-0124-4671000
Fax: +91-0124-4671001

KYOCERA Document Solutions Europe B.V.
Bloemlaan 4, 2132 NP Hoofddorp,
The Netherlands
Phone: +31-20-654-0000
Fax: +31-20-653-1256

KYOCERA Document Solutions Nederland B.V.
Beechavenue 25, 1119 RA Schiphol-Rijk,
The Netherlands
Phone: +31-20-5877200
Fax: +31-20-5877260

KYOCERA Document Solutions (U.K.) Limited
Eldon Court, 75-77 London Road,
Reading, Berkshire RG1 5BS,
United Kingdom
Phone: +44-118-931-1500
Fax: +44-118-931-1108

KYOCERA Document Solutions Italia S.p.A.
Via Verdi, 89/91 20063 Cernusco s/N.(MI),
Italy
Phone: +39-02-921791
Fax: +39-02-92179-600

KYOCERA Document Solutions Belgium N.V.
Sint-Martinusweg 199-201 1930 Zaventem,
Belgium
Phone: +32-2-7209270
Fax: +32-2-7208748

KYOCERA Document Solutions France S.A.S.
Espace Technologique de St Aubin
Route de l'Orme 91195 Gif-sur-Yvette CEDEX,
France
Phone: +33-1-69852600
Fax: +33-1-69853409

KYOCERA Document Solutions Espana, S.A.
Edificio Kyocera, Avda. de Manacor No.2,
28290 Las Matas (Madrid), Spain
Phone: +34-91-6318392
Fax: +34-91-6318219

KYOCERA Document Solutions Finland Oy
Atomitie 5C, 00370 Helsinki,
Finland
Phone: +358-9-47805200
Fax: +358-9-47805390

KYOCERA Document Solutions Europe B.V., Amsterdam (NL) Zürich Branch
Hohlstrasse 614, 8048 Zürich,
Switzerland
Phone: +41-44-9084949
Fax: +41-44-9084950

KYOCERA Document Solutions Deutschland GmbH
Otto-Hahn-Strasse 12, 40670 Meerbusch,
Germany
Phone: +49-2159-9180
Fax: +49-2159-918100

KYOCERA Document Solutions Austria GmbH
Eduard-Kittenberger-Gasse 95, 1230 Vienna,
Austria
Phone: +43-1-863380
Fax: +43-1-86338-400

KYOCERA Document Solutions Nordic AB
Esbogatan 16B 164 75 Kista, Sweden
Phone: +46-8-546-550-00
Fax: +46-8-546-550-10

KYOCERA Document Solutions Norge Nuf
Postboks 150 Oppsal, 0619 Oslo,
Norway
Phone: +47-22-62-73-00
Fax: +47-22-62-72-00

KYOCERA Document Solutions Danmark A/S
Ejby Industrivej 60, DK-2600 Glostrup,
Denmark
Phone: +45-70223880
Fax: +45-45765850

KYOCERA Document Solutions Portugal Lda.
Rua do Centro Cultural, 41 (Alvalade) 1700-106 Lisboa,
Portugal
Phone: +351-21-843-6780
Fax: +351-21-849-3312

KYOCERA Document Solutions South Africa (Pty) Ltd.
KYOCERA House, Hertford Office Park,
90 Bekker Road (Cnr. Allandale), Midrand, South Africa.
Phone: +27-11-540-2600
Fax: +27-11-466-3050

KYOCERA Document Solutions Russia LLC
Botanichesky pereulok 5, Moscow, 129090,
Russia
Phone: +7(495)741-0004
Fax: +7(495)741-0018

KYOCERA Document Solutions Middle East
Dubai Internet City, Bldg. 17,
Office 157 P.O. Box 500817, Dubai,
United Arab Emirates
Phone: +971-04-433-0412

KYOCERA Document Solutions Inc.
2-28, 1-chome, Tamatsukuri, Chuo-ku
Osaka 540-8585, Japan
Phone: +81-6-6764-3555
http://www.kyoceradocumentsolutions.com

© 2014 KYOCERA Document Solutions Inc.
KYOCERA is a trademark of KYOCERA Corporation